T120 models are designed for use for direct indicating and measuring temperature in various industrial plants such as oil refinery, sugar refinery, chemical and rubber plant, food industries, refrigeration, process, engineering, general industry and etc.
Pocket Thermowell must be used on all applications where thermometer bulb sensor is subjected to pressure, corrosive fluid or flow rate. Thermowell will make thermometer disassemble for calibration or replacement easier as the process will not disturbed.
Systems or equipments with strong vibration are apparent, the Capillary Thermometer model is recommended.

Standard Specification

Model	: **T120**
Dial Size	: 2 1/2″, 3″, 4″
Connection	: 3/8″ BSPT for 2 1/2″ and 3″ Dial
	: 1/2″ BSPT for 4″ Dial
Case / Cover	: SS304
Window	: Glass
Sensing Element	: Coiled Bimetallic
Connection	: SS304
Stem Length	: SS304, Max 2000mm
Stem OD	: 6mm, 8mm, 10mm
Accuracy	: - / + 2.0% of FS
Working Range	: Max 100% of FS
Zero Adjustment	: At pointer

INDUSTRIAL BI-METAL THERMOMETER

MODEL
T120

DIAL SIZE
2 1/2″
3″
4″

RANGE (REFER TEMPERATURE TABLE)

STEM LENGTH / OD (REFER TO TABLE)

RANGE (REFER PRESSURE TABLE)
3/8″ BSPT / NPT
1/2″ BSPT / NPT

OPTIONS
THERMOWELL
BRASS
SS304
SS316

SAMPLE OF ORDERING

T 1 2 0	4″	0 ~ 60 C/F	4″ L/10	1/2″ BSPT	SS304

INDUSTRIAL BI-METAL THERMOMETER

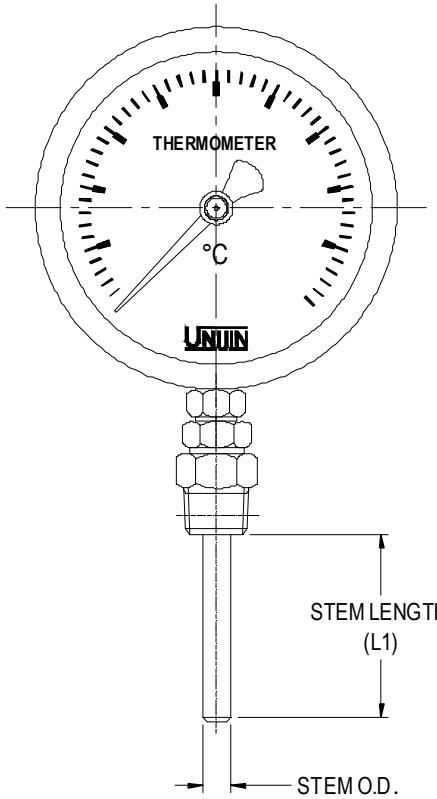

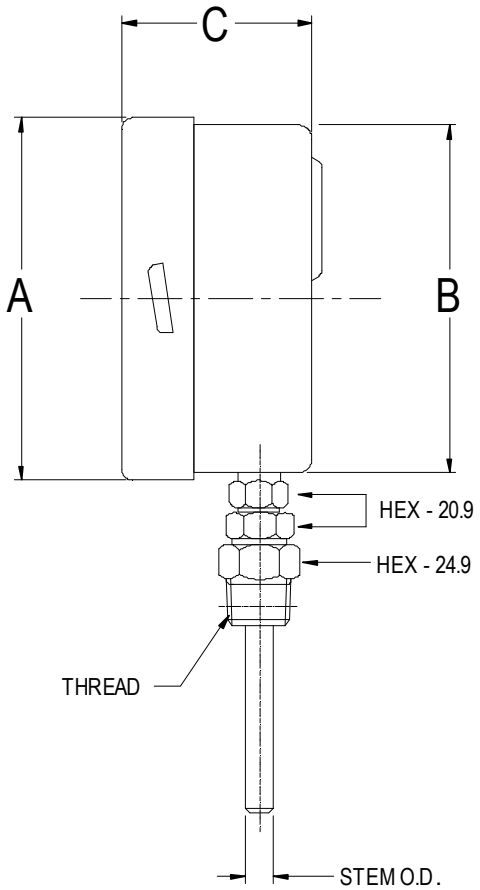

Scale (mm)

DIAL SIZE	A	B	C
2 1/2″	69.0	63.0	35.0
3″	84.0	75.0	47.0
4″	115.7	101.0	52.0

TEMPERATURE SCALE RANGES

SCALE C/F	MINIMUM STEM LENGTH (mm)		
	OD 6.0	OD 8.0	OD 10.0
- 50 ~ 50	55	50	50
- 50 ~ 100	45	35	35
-30 ~ 50	70	60	60
- 30 ~ 100	50	45	45
- 30 ~ 120	45	35	35
- 20 ~ 50	80	70	70
- 20 ~ 100	45	45	45
- 20 ~ 150	40	35	35
0 ~ 50	50	80	80
0 ~ 60	50	90	90
0 ~ 70	50	80	80
0 ~ 80	50	70	70
0 ~ 100	50	60	60
0 ~ 120	55	50	50
0 ~ 150	50	45	45
0 ~ 200	45	35	35
0 ~ 250	35	35	35
0 ~ 300	35	30	30
0 ~ 350	60	45	45
0 ~ 400	60	45	45
0 ~ 500	60	45	45
SPECIAL RANGE	**CONTACT MANUFACTURER**		

STANDARD STEM LENGTH (L1)

LENGTH (INCH)	2 1/2″	3″	4″

REMARK:

Pocket Thermowell must be used on all applications where thermometer bulb sensor is subjected to pressure, corrosive fluid or flow rate. Thermowell will make thermometer disassemble for calibration or replacement easier as the process will not disturbed.